# Totem by PerezOchando

With its almost monolithic appearance, Totem invites us to contemplate it as if it were a sculptural work, transcending the limits between function and form.

Teulat

Fact sheet

## Sideboard 4D3Dr

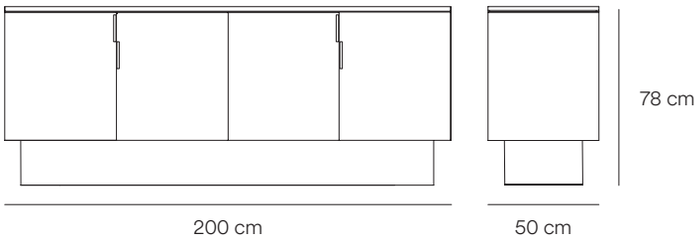


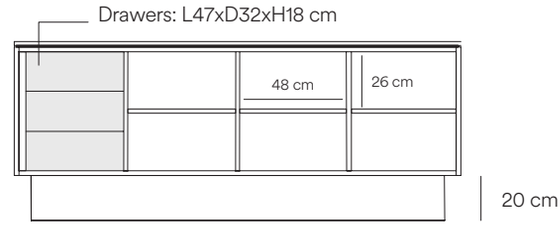


## TV Bench 4D

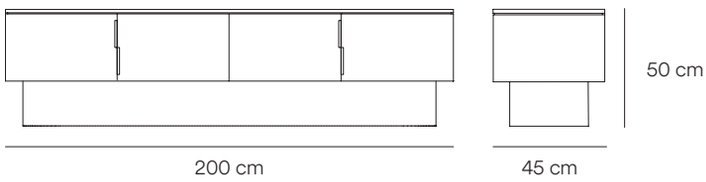


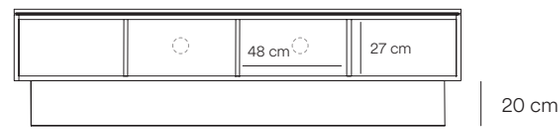


## Cabinet 2D

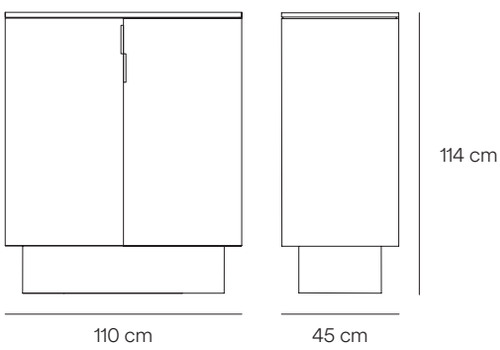


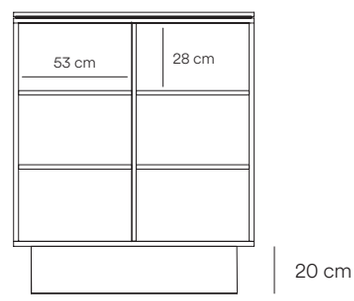


## Chest 2D

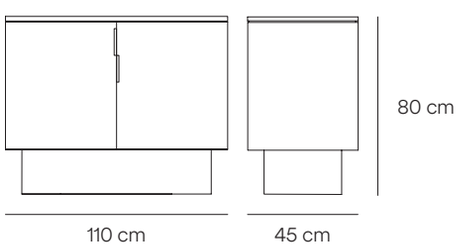


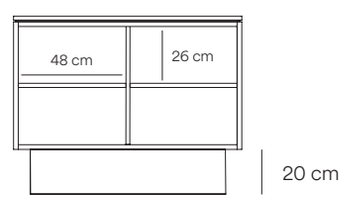


## Bedside table 2Dr

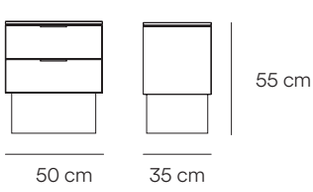


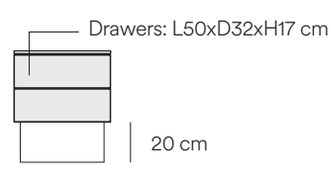

## Round coffee table

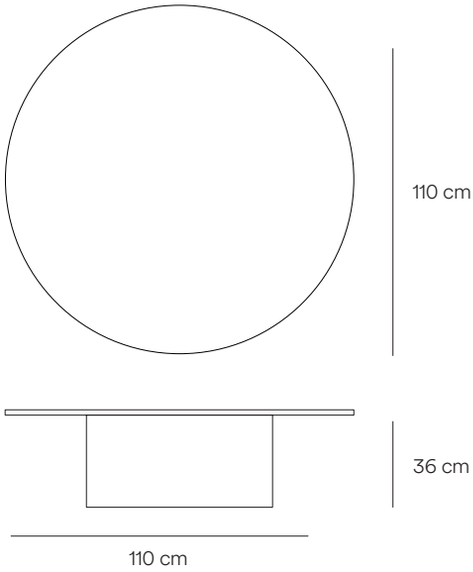


## Side table

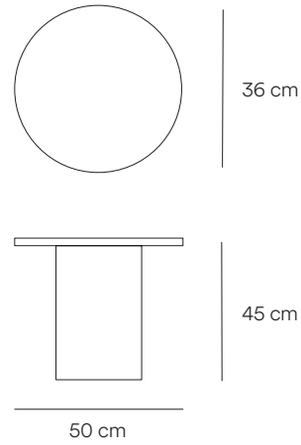


## Rect. coffee table

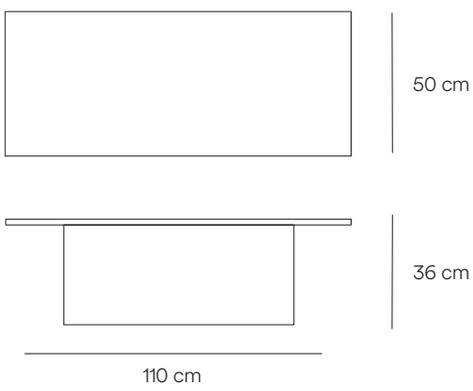

## Finishes

Lacquered MDF shell

## Lacquered

Anthracite gray
Pantone 432C

Sand
Pantone 7528C

## References

### Sideboard 4D3Dr
Anthracite gray: 17306_TE
Sand: 17305_TE

### TV Bench 4D
Anthracite gray: 17308_TE
Sand: 17307_TE

### Cabinet 2D
Anthracite gray: 17310_TE
Sand: 17309_TE

### Chest 2D
Anthracite gray: 17312_TE
Sand: 17311_TE

### Bedside table 2Dr
Anthracite gray: 17314_TE
Sand: 17313_TE

### Round coffee table
Anthracite gray: 18743_TE
Sand: 18742_TE

### Rect. coffee table
Anthracite gray: 18741_TE
Sand: 18740_TE

### Side table
Anthracite gray: 18747_TE
Sand: 18746_TE

Share with us your home
@teulatdesign
#teulat #teulateditions

Teulat
C/Enlace Verola s/n,
46430, Sollana, Valencia - Spain
T. +34 96 116 30 05
info@teulat.es
ventas@teulat.es
sales@teulat.es
www.teulat.es
www.teulateditions.es

instagram.com/teulatdesign
facebook.com/teulatdesign
linkedin.com/company/teulat
pinterest.es/teulatdesign